

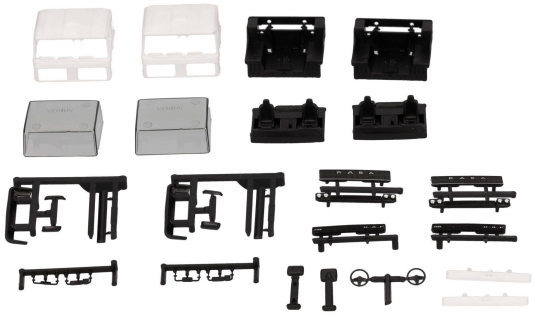



DATA SHEET | Model: 085809 | Last updated: 25.11.2026

Parts Service: Cabin DAF 2800/Rába, 2 pieces

Manufacturer	Raba
Scale	1:87
Category	Accessories & Parts
Material	plastic
Color	white
Release Date	March/April 2024